| POS-NR. | DESCRIPTION | MATERIAL | QTY |
|---|---|---|---|
| 1 | Modified Flange DN50 KF | 1.4301 (X5CrNi18-10) | 1 |
| 2 | SUB-D 15pin F/T | Stainless Steel | 1 |

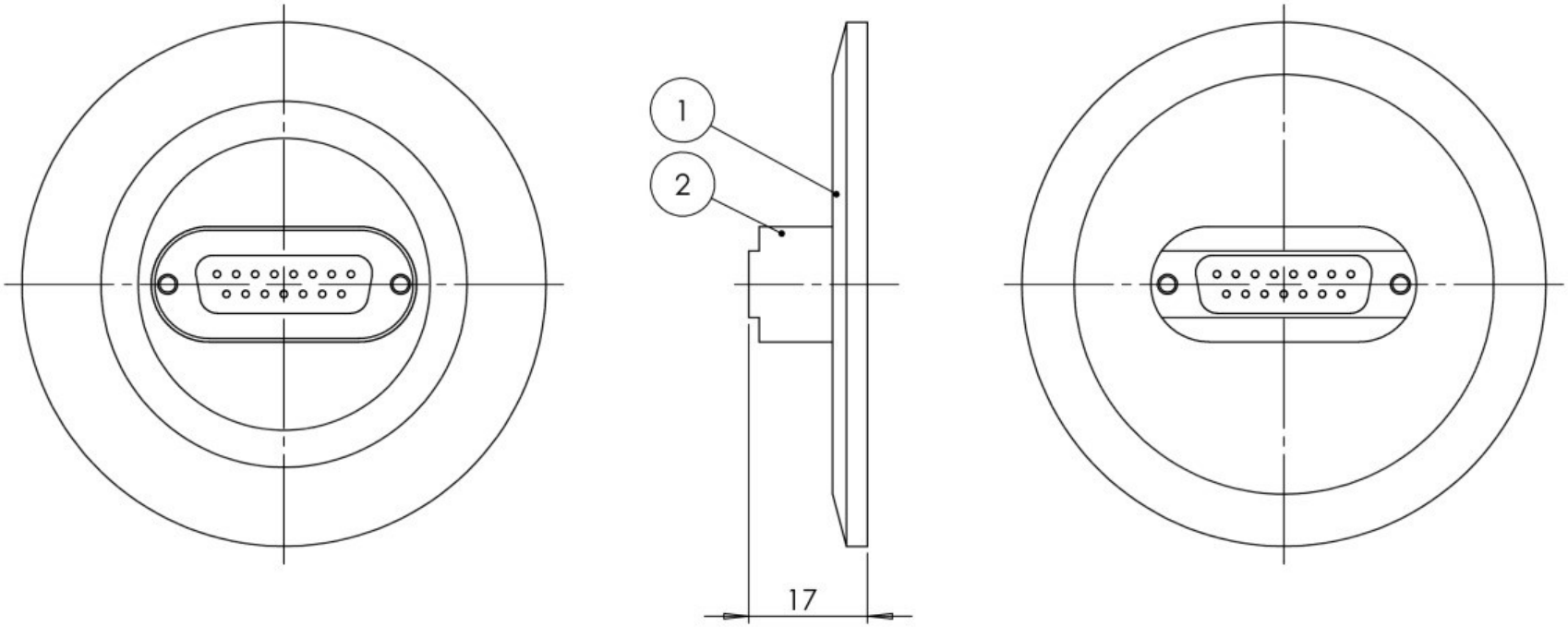


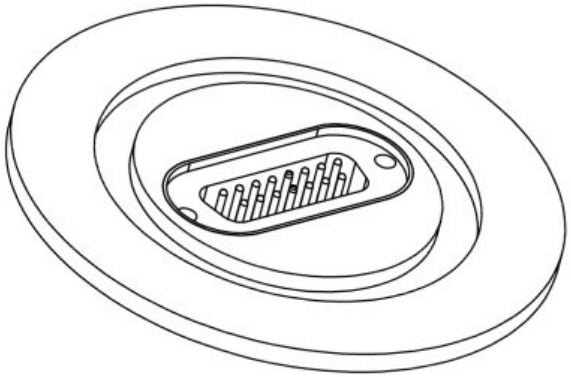

Bemerkungen (Remarks): UHV+HSG=50

All informations provided in this drawing is considered to be confidential, proprietary and secret information. It is intended only for the use of individual or entity to whom it is sent. Individual or entity agrees to not disseminate or copy this information to anyone other than originally specified without the written consent Allectra GmbH.

Freimaßtoleranz (Standard Toleranz)

Maßstab (Scale): 1:1

Rauheit (Rougness)

europ.Projektion

Material, Standard Oberfläche (Treatment)

Kanten (edges)

| | Datum | Name |
|---|---|---|
| Design | 14.05.2014 | JB |
| Drawn | 14.05.2014 | JB |
| Check | | |

Bezeichnung (Title)

15 pin SUB-D F/T

onto Flange DN50 KF

Gewicht (weight): 260.02 g

Page: 1 Pages: 1

Zeichnungsnummer (Drawing No.): 210-D15-K50

Revision

Datei (File): C:\PDMStore\C:\PDMStore\

Format A4

| Index | Modification | Datum | Name |
|---|---|---|---|
| | | | |

allectra