POS-NR.	DESCRIPTION	Material	QTY
1	Modified Flange DN63 ISO-K	1.4301 (X5CrNi18-10)	1
2	25 pin SUB-D F/T weldable type	Stainless Steel	2

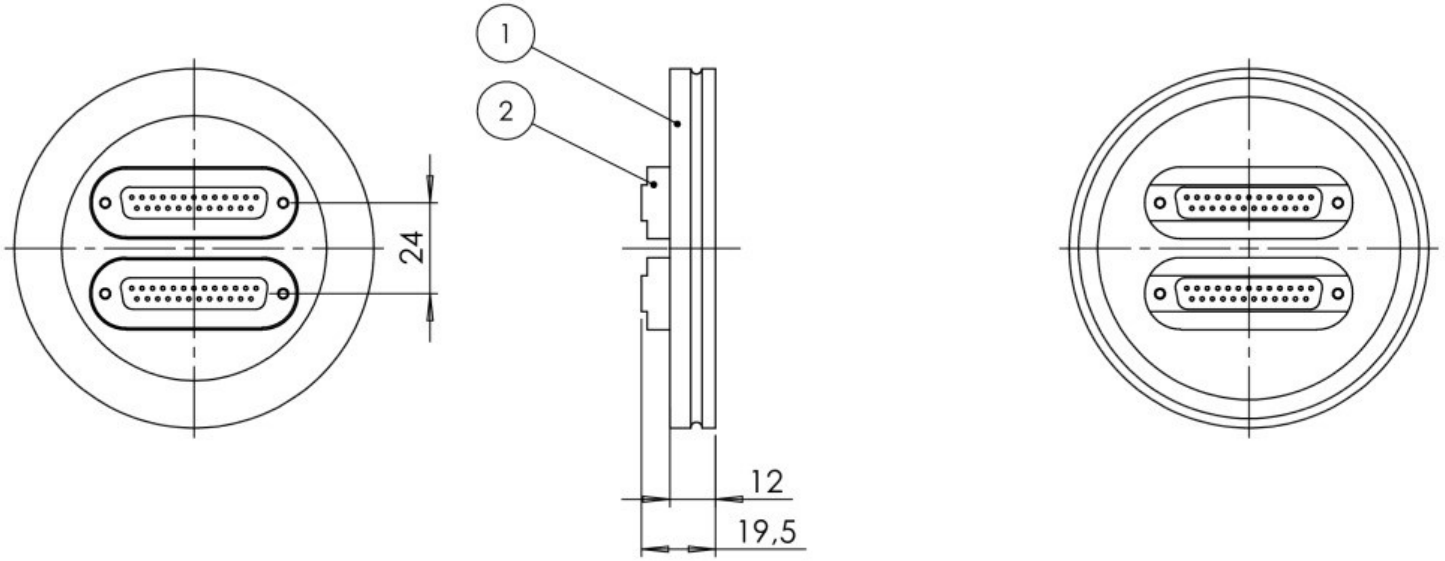

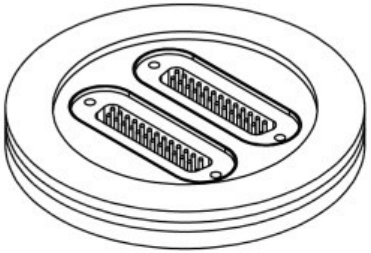

Bemerkungen (Remarks): UHV-CON/HSG=66

All informations provided in this drawing is considered to be confidential, proprietary and secret information. It is intended only for the use of individual or entity to whom it is sent. Individdual or entity agrees to not disseminate or copy this information to anyone other than originally specified without the written consent Allectra GmbH.

Freimaßtoleranz (Standard Toleranz)

Maßstab (Scale): 1:2

Rauheit (Rougness)

europ.Projektion

Material, Standard Oberfläche (Treatment)

Kanten (edges): ±0.1 / 0.25

	Datum	Name
Design	14.05.2014	JB
Drawn	14.05.2014	JB
Check		

Bezeichnung (Title): 2 of 25 pin Sub-D F/T onto Flange DN63 ISO-K

Gewicht (weight): 635.03 g

Page: 1 Pages: 1

Zeichnungsnummer (Drawing No.): 210-D25-ISO63-2

Revision

Datei (File): C:\PDMStore\C:\PDMStore\

Format A4

Index	Modification	Datum	Name