POS-NR.	DESCRIPTION	MATERIAL	QTY
1	Modified Flange DN63 ISO-K	1.4301 (X5CrNi18-10)	1
2	SUB-D 15 pin F/T	Stainless Steel	3

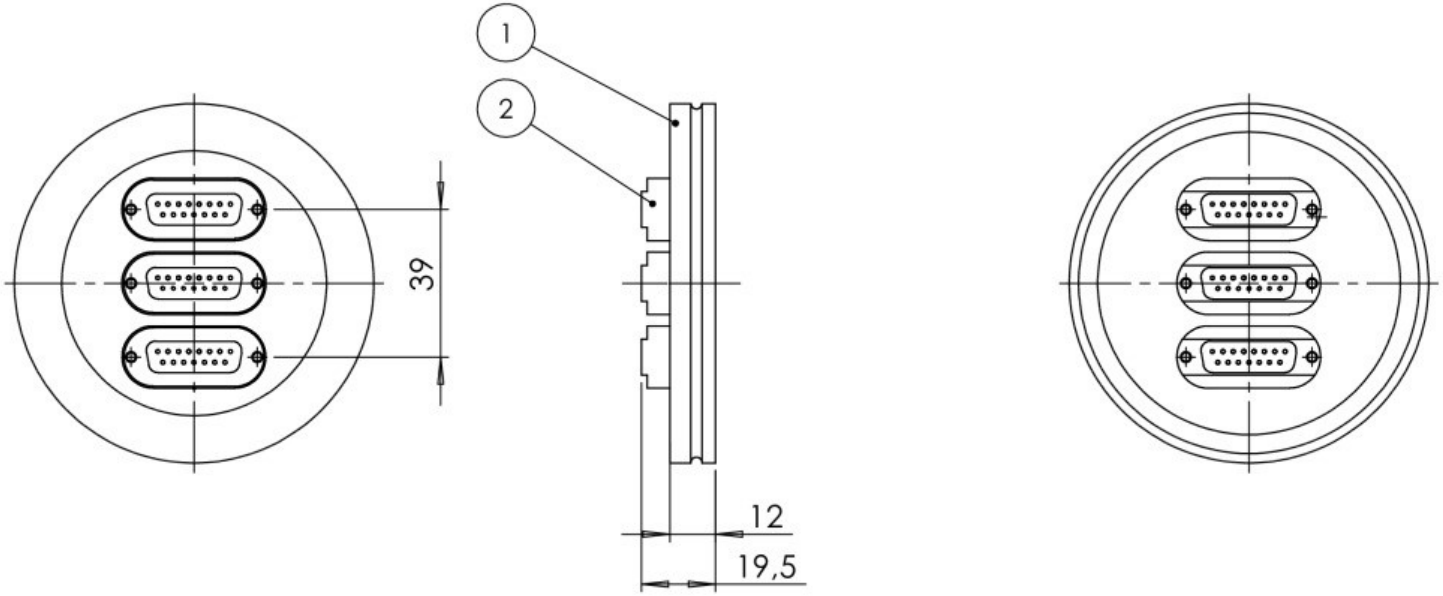

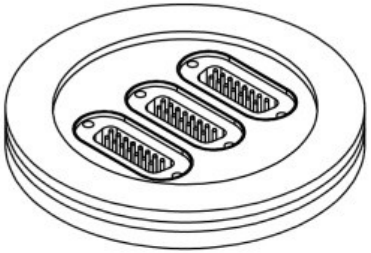

Bemerkungen (Remarks): UHV-CON/HSG=66

No HV-HSG, no HV-CON

All informations provided in this drawing is considered to be confidential, proprietary and secret information. It is intended only for the use of individual or entity to whom it is sent. Individual or entity agrees to not disseminate or copy this information to anyone other than originally specified without the written consent Allectra GmbH.

Freimaßtoleranz (Standard Toleranz)

Maßstab (Scale): 1:2

Rauheit (Rougness)

europ.Projektion

Material, Standard Oberfläche (Treatment)

Kanten (edges): ±0.1 / 0.25

	Datum	Name
Design	19.11.2013	FW
Drawn	19.11.2013	FW
Check	19.11.2013	

Bezeichnung (Title): 3 of 15 pin Sub-D F/T onto Flange DN63 ISO-K

Gewicht (weight): 666.05 g

Page: 1 Pages: 1

Zeichnungsnummer (Drawing No.): 210-D15-ISO63-3

Revision

allectra

Index	Modification	Datum	Name

Datei (File): C:\PDMStore\C:\PDMStore\

Format A4