| POS-NR. | DESCRIPTION | Material | QTY |
|---|---|---|---|
| 1 | Front Plate for SUB-D 9 Pin | PEEK | 1 |
| 2 | Back Plate for SUB-D 9 Pin | PEEK | 1 |
| 3 | Hexagon Nut M2 DIN934 | Stainless Steel | 2 |
| 4 | Countersunk Screw M2x20 | Stainless Steel | 2 |
| 5 | Hexagon Nut M2.5 | Stainless Steel | 2 |
| 6 | Screw M2.5 x 30 | Stainless Steel | 2 |

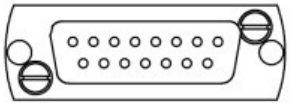

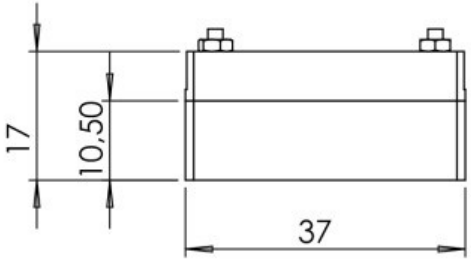


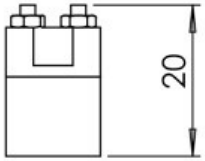


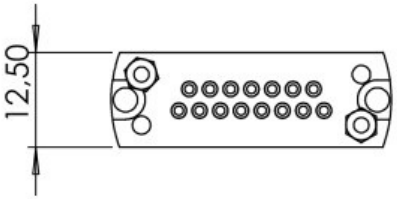


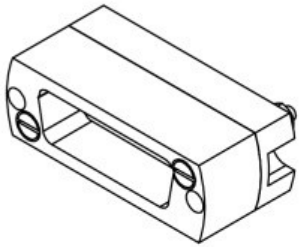

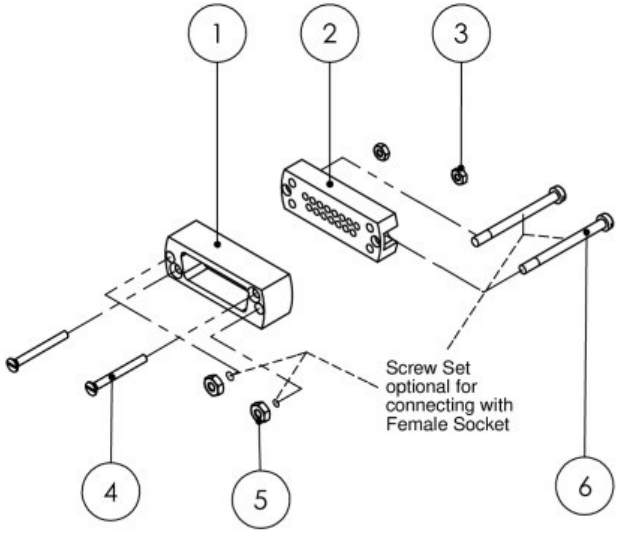


Bemerkungen
(Remarks)

All informations provided in this drawing is considered to be confidential, proprietary and secret information. It is intended only for the use of individual or entity to whom it is sent. Individual or entity agrees to not disseminate or copy this information to anyone other than originally specified without the written consent Allectra GmbH.

Freimaßtoleranz (Standard Toleranz)

Maßstab (Scale): 1:1

Rauheit (Rougness)

europ. Projektion

Material, Standard Oberfläche (Treatment)

Kanten (edges)

| | Datum | Name |
|---|---|---|
| Design | 28.02.2014 | JB |
| Drawn | 31.03.2014 | FW |
| Check | 31.03.2014 | |

Bezeichnung (Title)

UHV Connector 15 Pin

Standard SUB-D

Gewicht (weight): 11.43 g

Page: 2 Pages: 5

Zeichnungsnummer (Drawing No.): 211-MS15-PK

Revision

allectra

| Index | Modification | Datum | Name |
|---|---|---|---|

Datei (File) C:\PDMStore\C:\PDMStore\

Format A4