POS-NR.	DESCRIPTION	Material	QTY
1	Front Plate for SUB-D 50 Pin	PEEK	1
2	Back Plate for SUB-D 50 Pin	PEEK	1
3	Hexagon Nut M2 DIN934	Stainless Steel	2
4	Countersunk Screw M2x20	Stainless Steel	2
5	Screw M2.5 x 30	Stainless Steel	2
6	Hexagon Nut M2.5	Stainless Steel	2

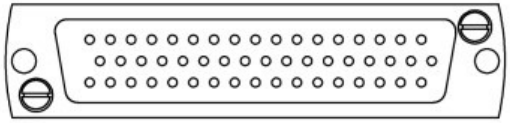

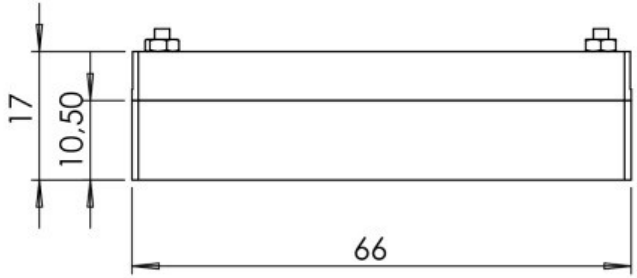

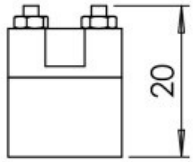

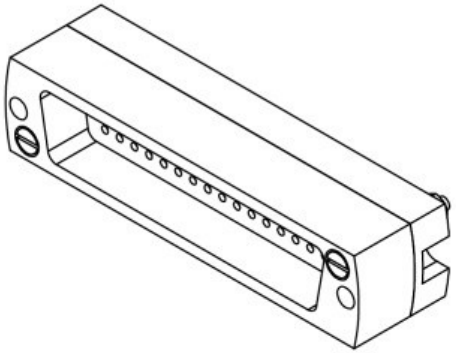

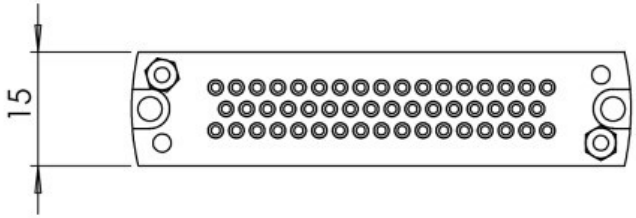

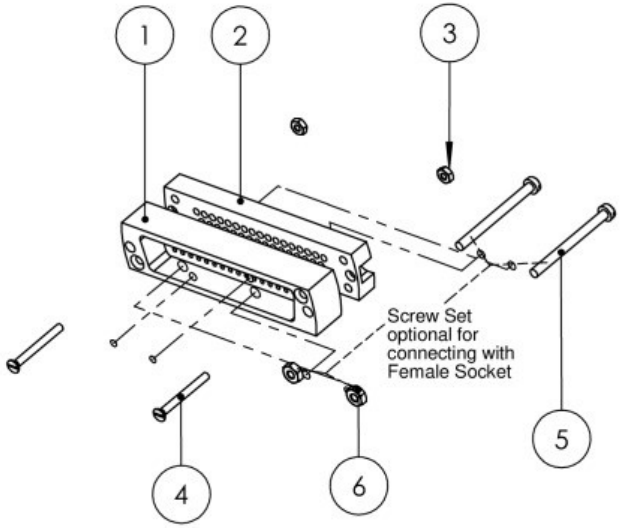

Bemerkungen
(Remarks)

All informations provided in this drawing is considered to be confidential, proprietary and secret information. It is intended only for the use of individual or entity to whom it is sent. Individdual or entity agrees to not disseminate or copy this information to anyone other than originally specified without the written consent Allectra GmbH.

Freimaßtoleranz
(Standard Toleranz)

Maßstab
(Scale)
1:1

Rauheit (Rougness)

europ.Projektion

Material, Standard
Oberfläche
(Treatment)

Kanten (edges)

	Datum	Name
Design	28.02.2014	JB
Drawn	31.03.2014	FW
Check	31.03.2014	

Bezeichnung
(Title)

UHV Connector 50 Pin

Standard SUB-D

Gewicht
(weight) g
18.17

Page: 5 Pages: 5

allectra

Zeichnungsnummer
(Drawing No.) 211-MS50-PK

Revision

Index	Modification	Datum	Name

Datei (File) C:\PDMStore\C:\PDMStore\

Format A4