POS-NR.	DESCRIPTION	Material	QTY
1	UHV Housing	3.1645 (EN AW-2007)	2
2	Clamp	1.4305 (X8CrNiS18-9)	1
3	SCREW M2.5X5	Stainless Steel	2
4	SCREW M2.5x12	Stainless Steel	2

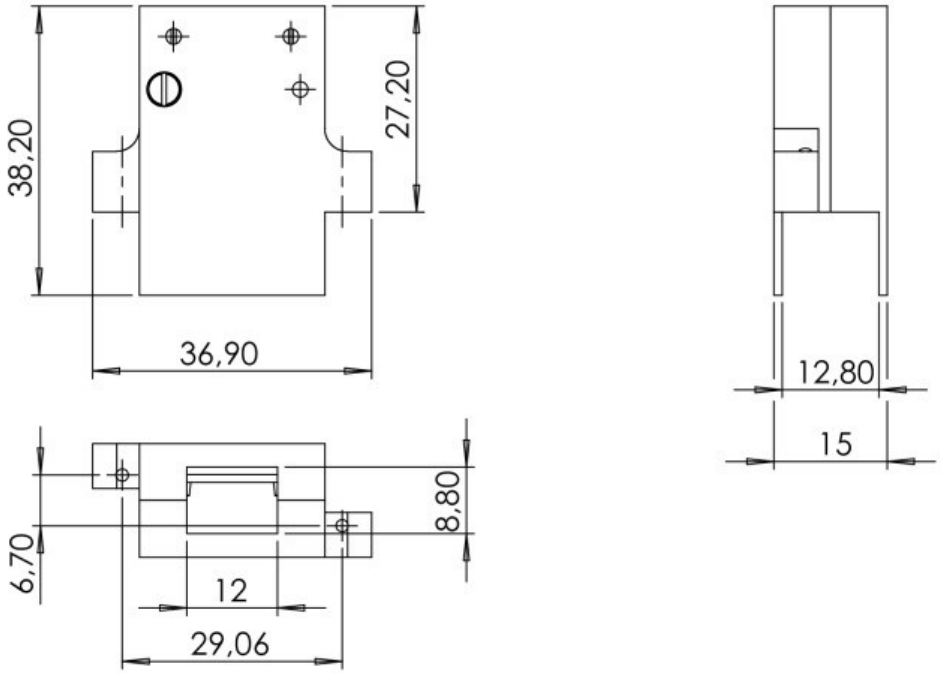

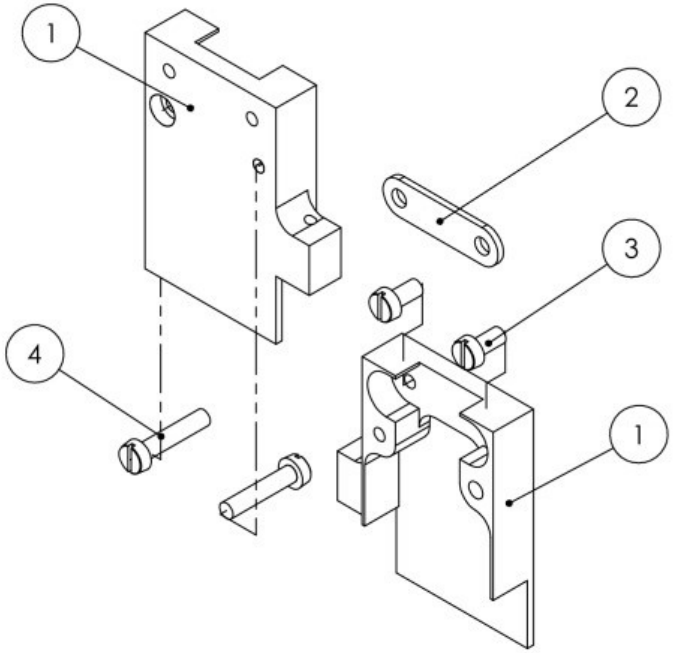

Bemerkungen
(Remarks)

All informations provided in this drawing is considered to be confidential, proprietary and secret information. It is intended only for the use of individual or entity to whom it is sent. Individual or entity agrees to not disseminate or copy this information to anyone other than originally specified without the written consent Allectra GmbH.

Freimaßtoleranz
(Standard Toleranz)

Maßstab
(Scale)
1:1

Rauheit (Rougness)

europ.Projektion

Material, Standard
Oberfläche
(Treatment)

Kanten (edges)

	Datum	Name
Design	24.03.2014	FW
Drawn	24.03.2014	FW
Check	24.03.2014	

Bezeichnung
(Title)

Housing for PEEK + Ceram. Con
for 15 Pin Standard SUB-D

Gewicht
(weight)
15.65 g

Page: 2
Pages: 5

allectra

Zeichnungsnummer
(Drawing No.)
211-HSG-D15-UHV

Revision

Index	Modification	Datum	Name

Datei (File) C:\PDMStore\C:\PDMStore\

Format A4